10.PCB Diagrams

10-1 Main PCB Diagram(Top)

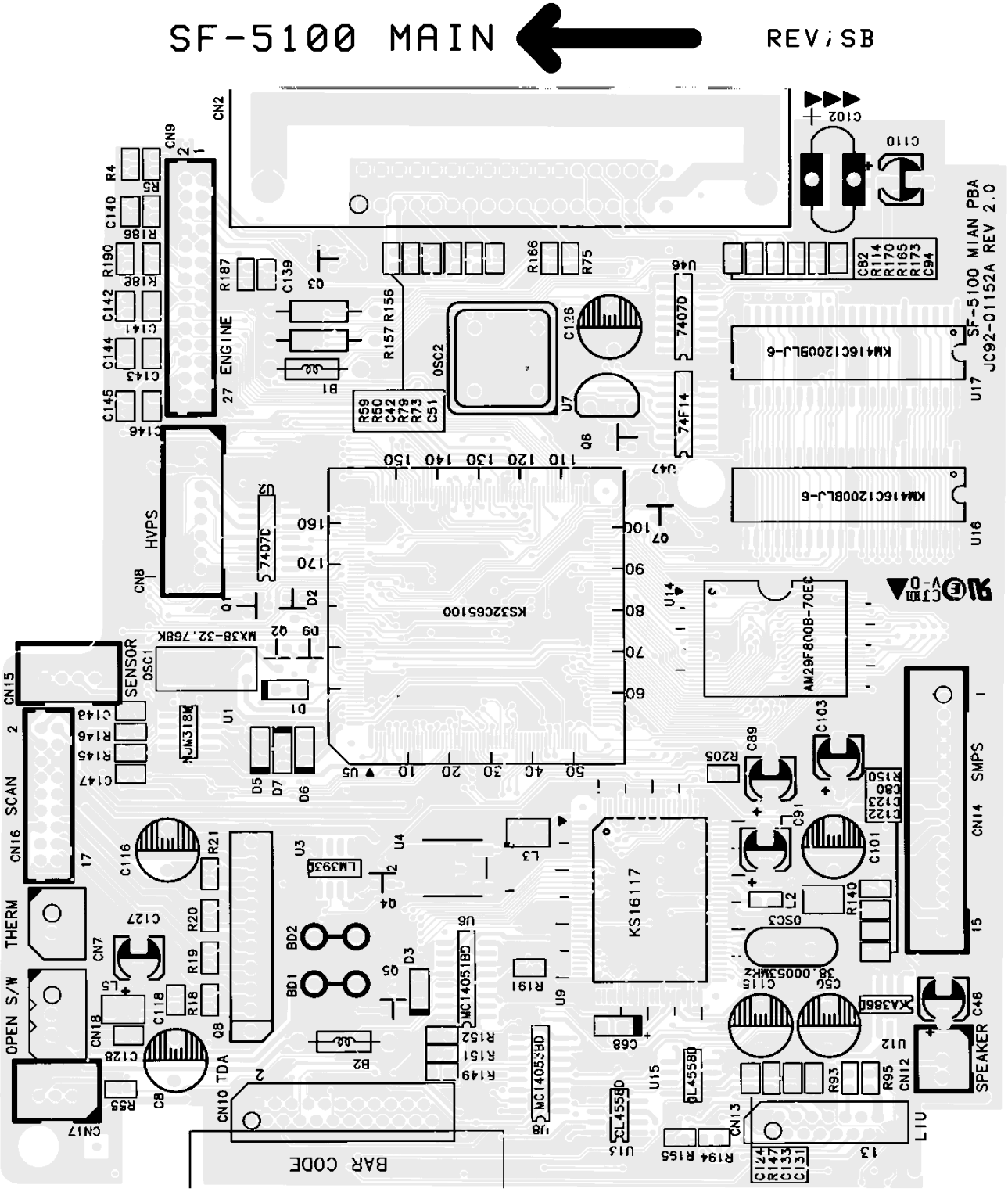

10-2 Main PCB Diagram(Bottom)

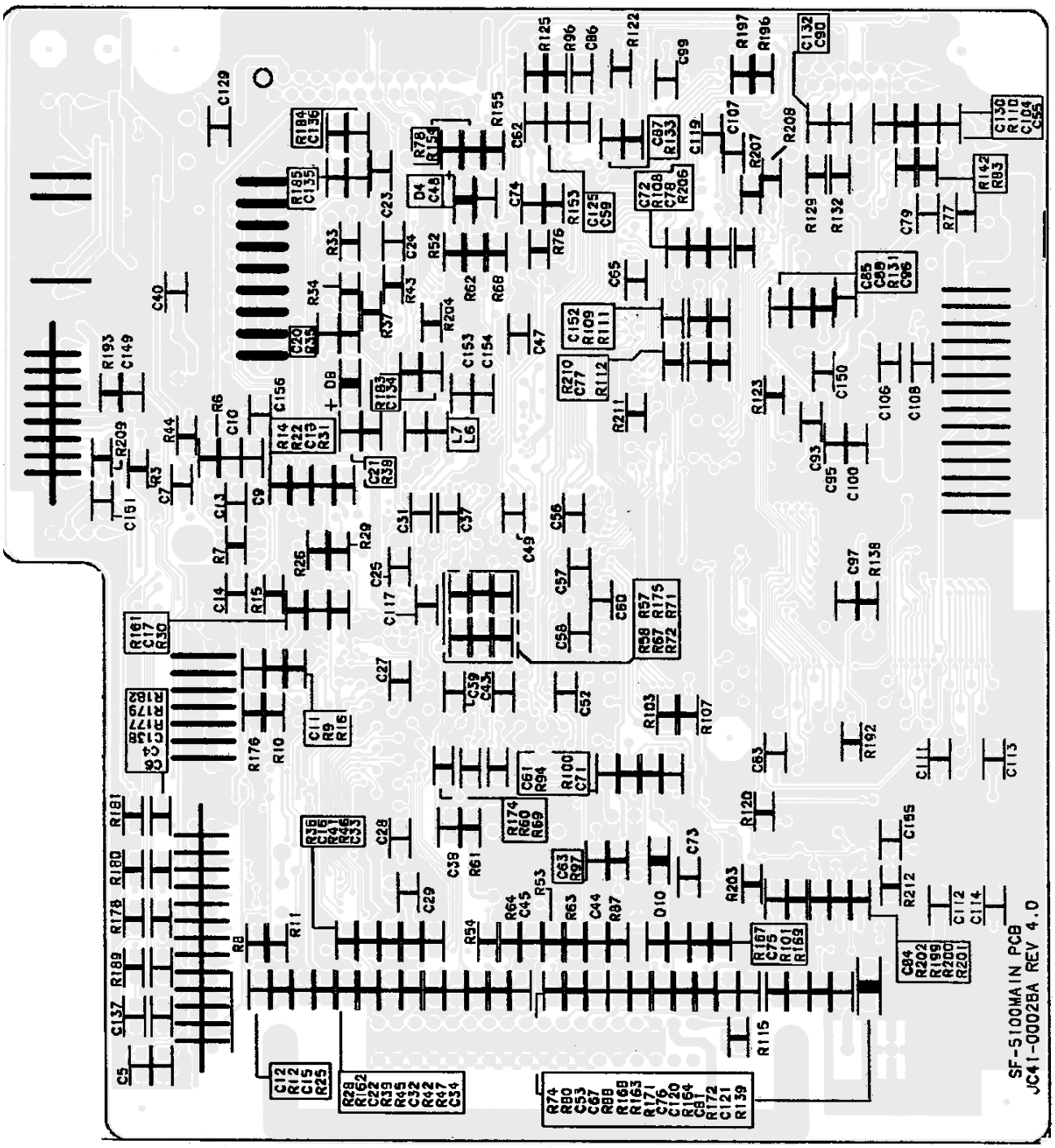

10-3Engine PCB Diagram(Top)

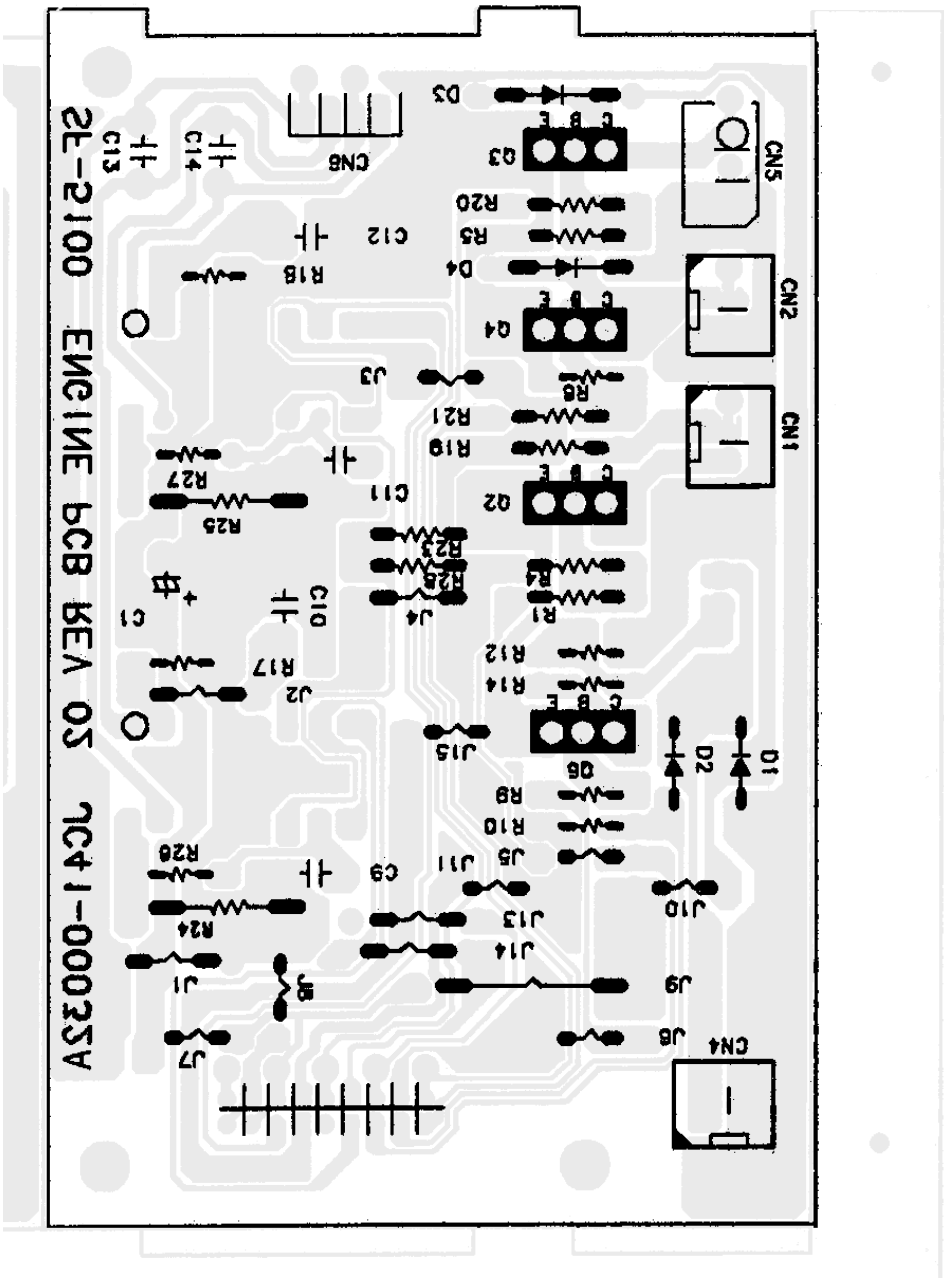

10-4Engine PCB Diagram(Bottom)

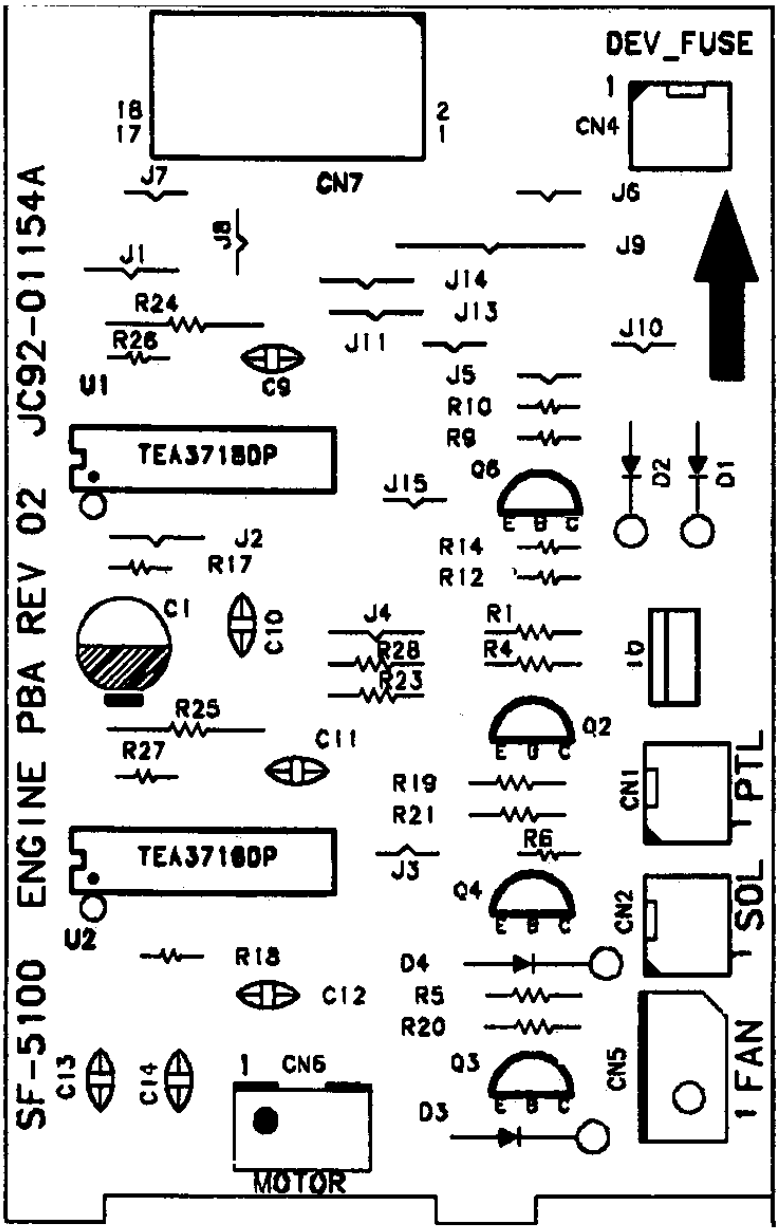

10-5LIU PCB Diagram

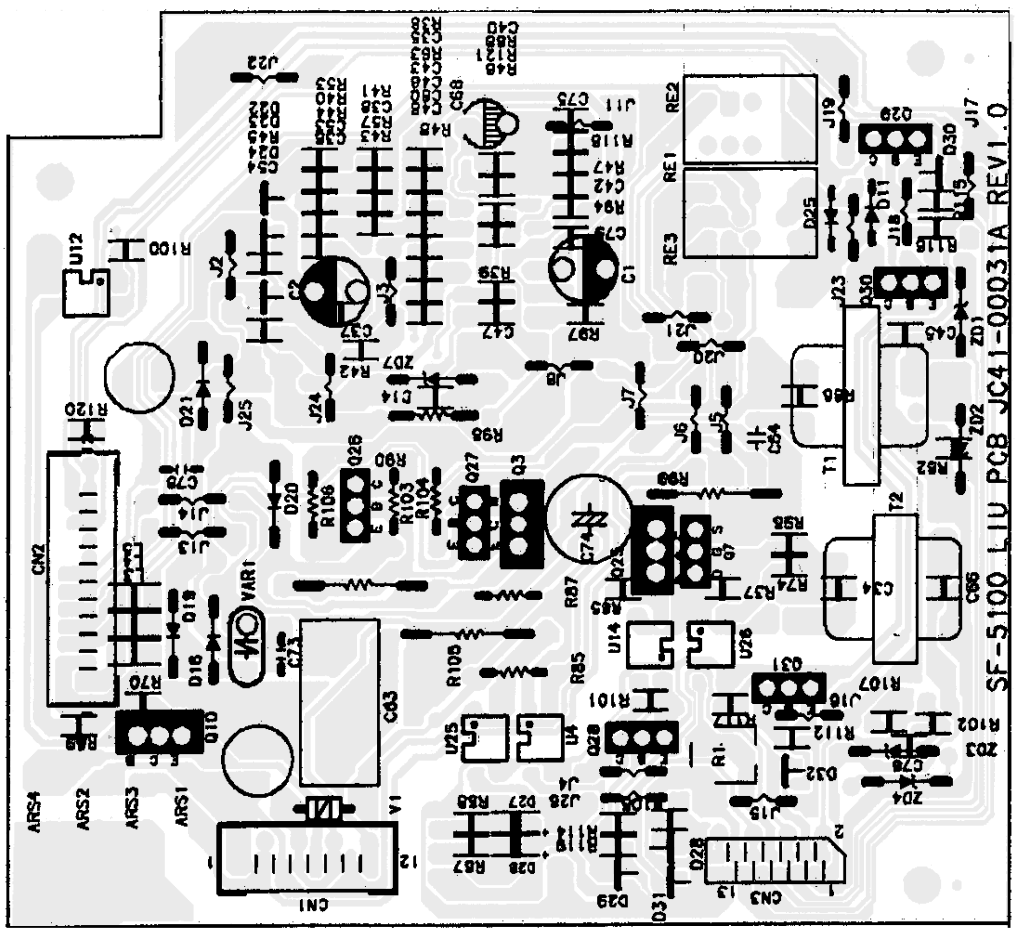
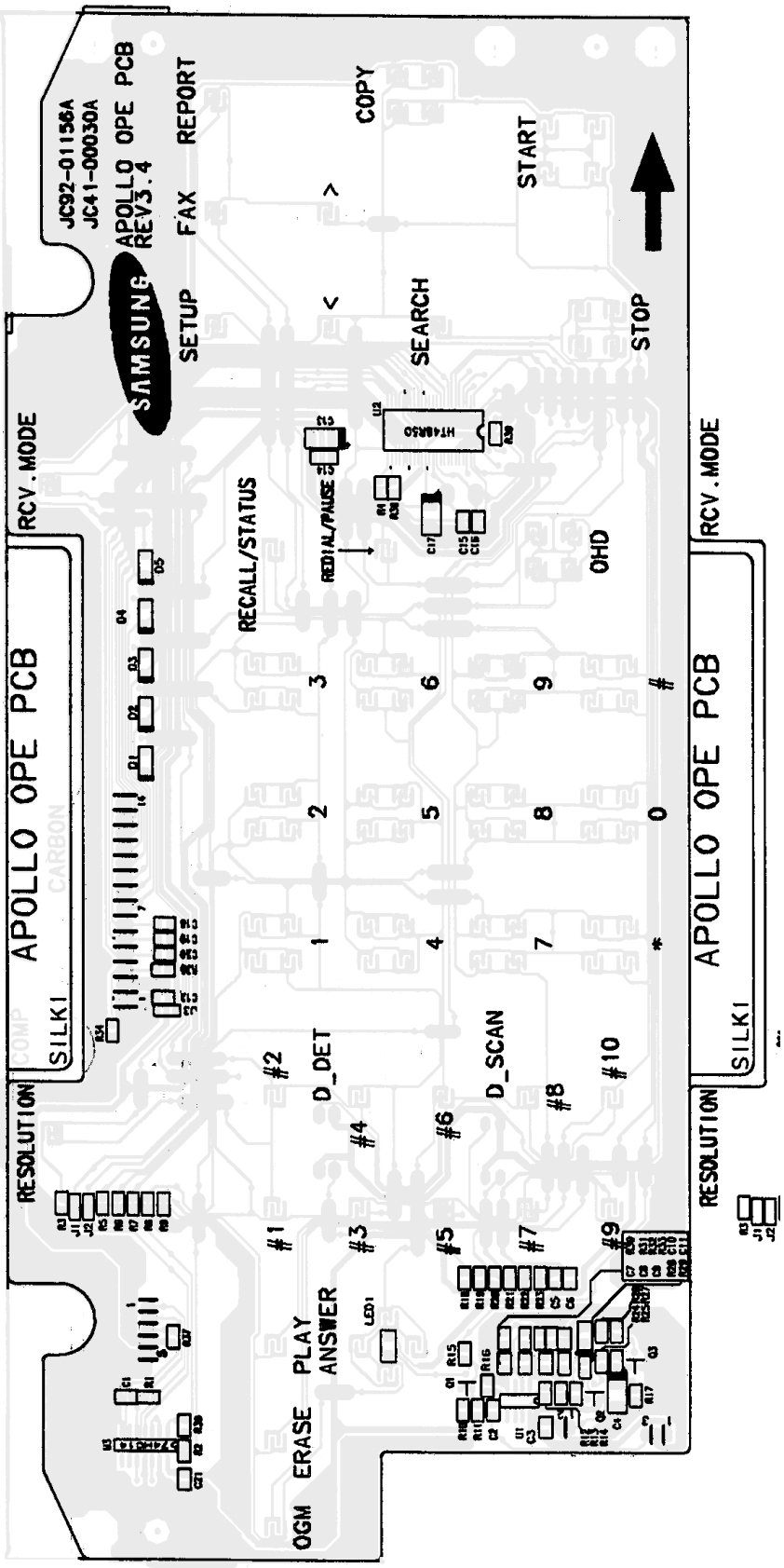
10-6OPE PCB Diagram